Cam locks Series 400-500

Model 503 RS1

Characteristics:
-mechanical re-programmable lock
-made in brass
-external finish in in nickel
-rotation 90° clockwise
-resistant to opening with method "bumping"
-resistant to opening with picks - "picking"
-resistant to drilling

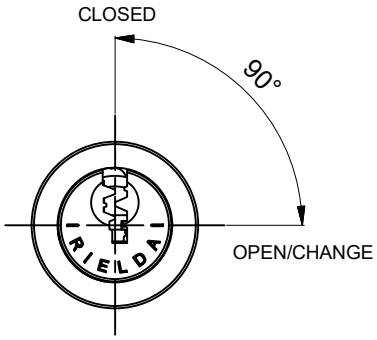

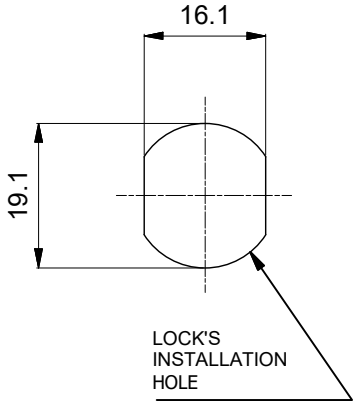

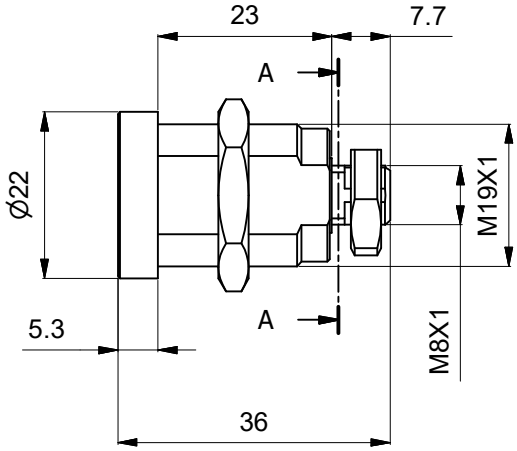

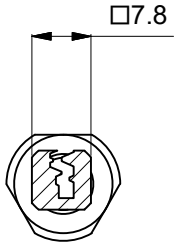

A-A